# ASSEMBLY INSTRUCTION
# 4 DRAWER CHEST

| No | Name of Component | Q.ty |
|---|---|---|
| A | 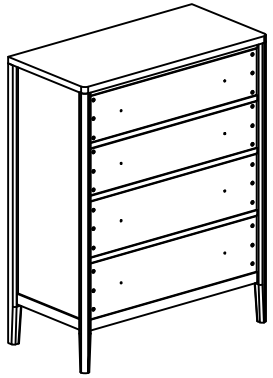 | 1<br>2<br>1 |

| No | Name of Hardware | Q.ty |
|---|---|---|
| 1 | Bracket 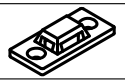 | 2 |
| 2 | Tie | 2 |

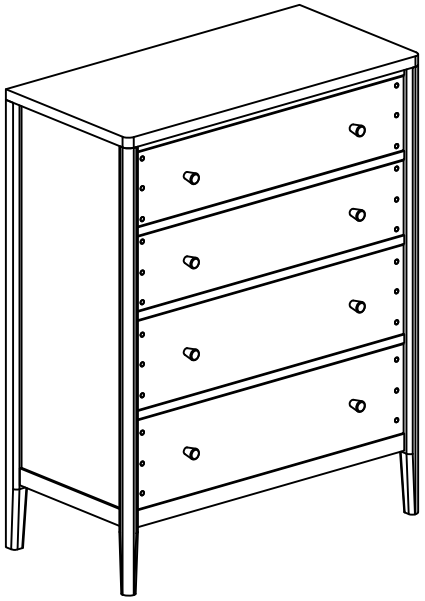

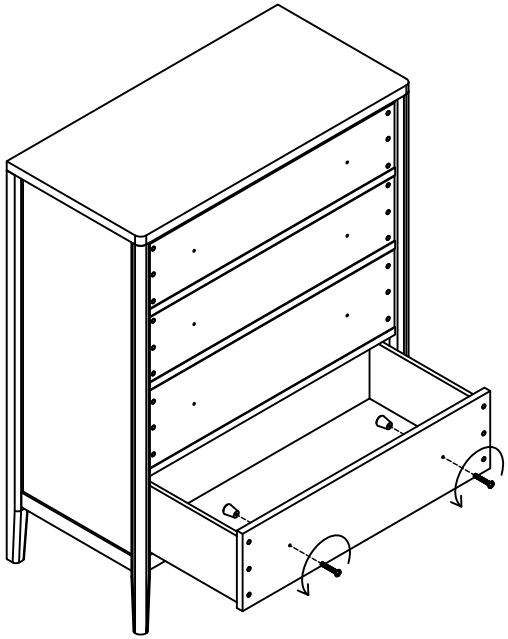

STEP 1

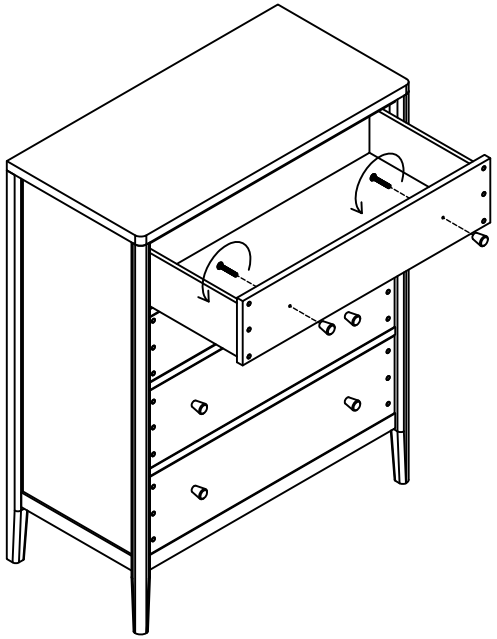

STEP 2

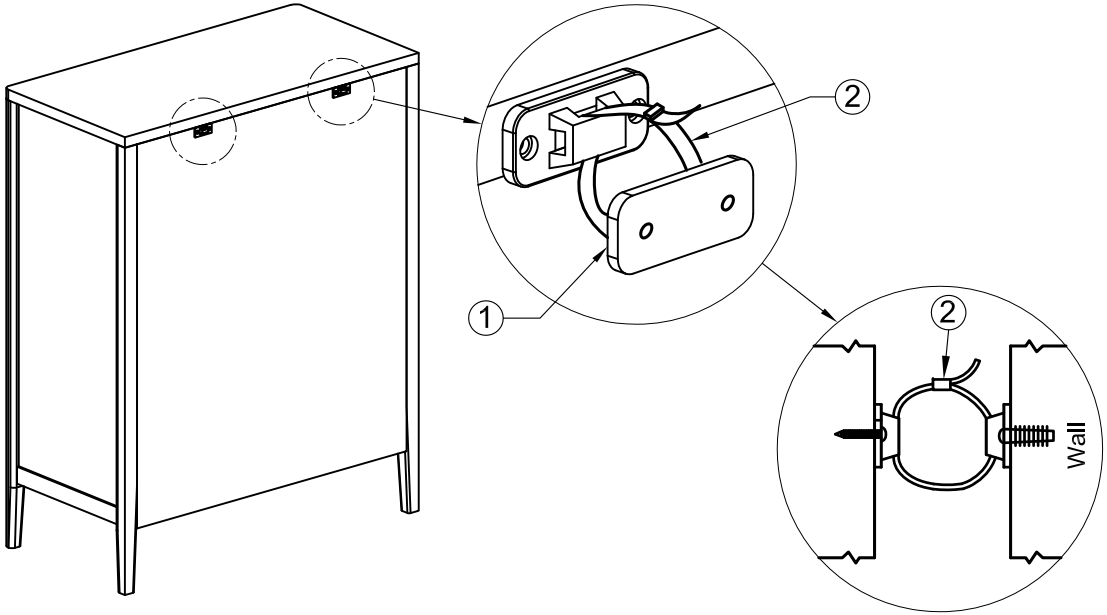


FINAL