Dunelm

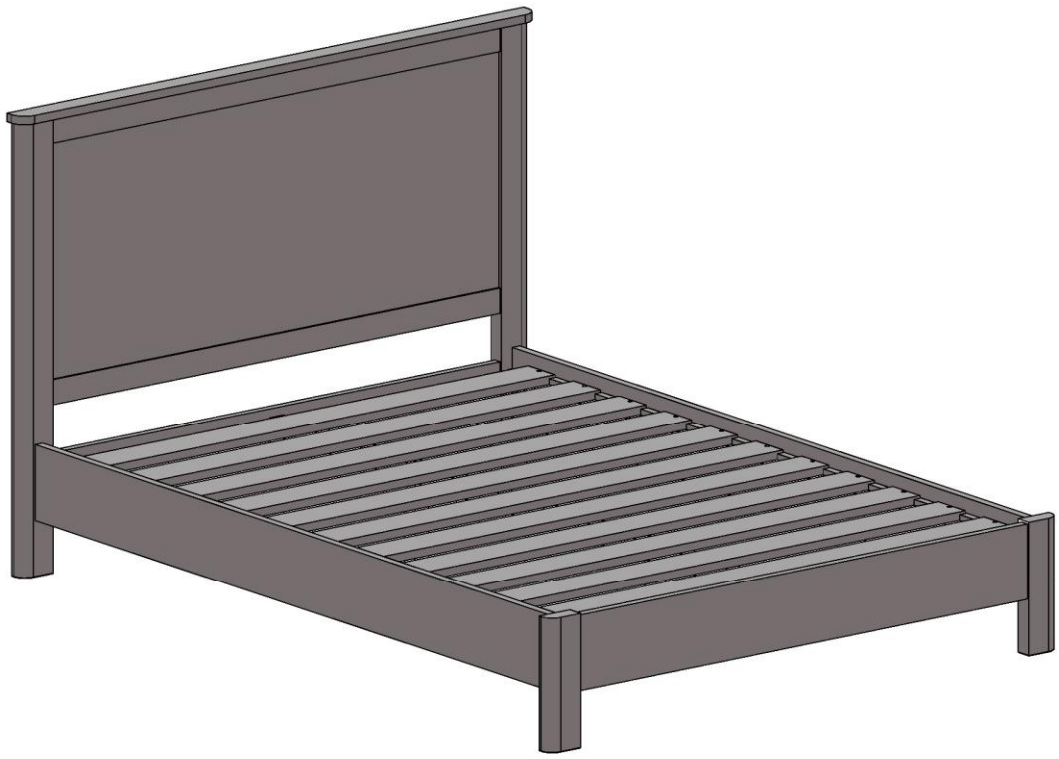

JASPER KING BEDSTEAD OAK

DEAR CUSTOMER

Thank you for purchasing your new piece of furniture from Dunelm.

We put a lot of effort in the design and construction of our products to ensure they set the standard for quality, durability and ease of assembly.

If for any reason you feel we haven't lived up to the high standards we set ourselves, please don't hesitate in contacting us on 0345 165 65 65 where our team will be very keen to understand what has gone wrong and, more importantly, put it right.

The next step…

There is no need to feel daunted by the number of parts and fittings in front of you, we have compiled this straight forward, step-by-step guide to make sure that assembling your furniture is as easy as 1, 2, 3.

Before you begin, we advise that you check that you have everything you need to get started.

TOP TIP
Find a space to spread these out across the floor before you begin assembling them. Lay each panel down in position, ready to build. It is recommended that two people assemble this product together.

The full list of furniture parts, fixtures and fittings, as well as the tools you will need for assembly, can be found on page 3 and 4 of this manual.

TOP TIP
Identify all of the fittings, make sure that you have them all prepared and familiarise yourself with each component, to make things easier when you are putting it all together.

Safety and Care Advice

IMPORTANT - The first step you need to take is to ensure your safety!
Please take the time to read and understand these instructions before assembling your furniture.

Keep children and animals away from the assembly area.
This furniture contains small parts that could cause choking if swallowed.
Keep all plastic wrapping materials way from children to avoid danger of suffocation.
Ensure that all packaging is disposed of carefully and responsibly.
Make sure that you allow enough space to move around when assembling your furniture.

Parts & Fittings for the Jasper King Bedstead Oak (30244721)

Panel - exploded view

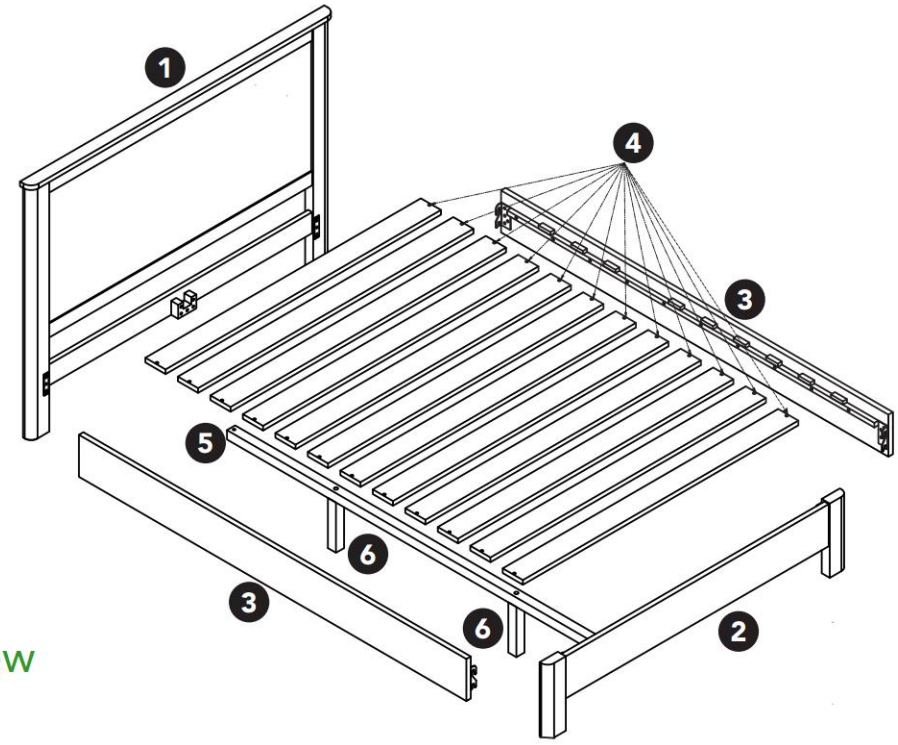

Panels - plan view

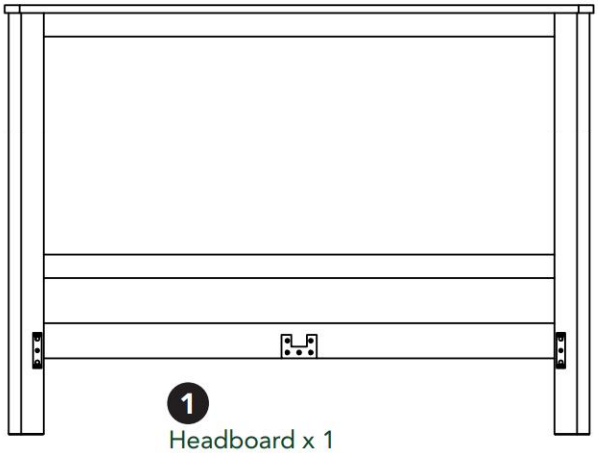

1 Headboard x 1
1658 x 1100 mm

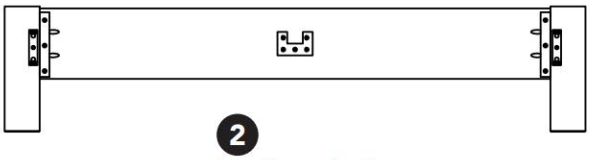

2 Footboard x 1
1638 x 320 mm

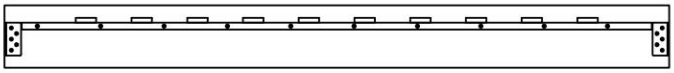

3 Side Rails x 2
2020 x 180 mm

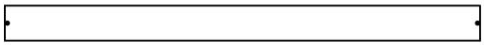

4 Slats x 12
1515 x 100 mm

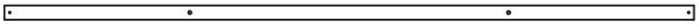

5 Center Rail x 1
2034 x 40 mm

6 Support Legs x 2
215 x 40 mm

Fittings

A
40mm
Bolt x 2

B
30mm
Bolt x 8

C
40mm
Screw x 2

D
30mm
Screw x 24

E
8 x 18mm
Washer x 8

F
8 x 14mm
Lock Washer x 8

Tools required

Allen Key 4mm

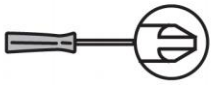

Cross slot screwdriver

The use of power tools to assemble the product is not recommended due to the risk of over tightening fixings

Before you start

Check the pack and make sure you have all the parts listed above. If not, contact the helpline on 0345 165 65 65 who will be able to help you.

When you are ready and sure that you have the right tools to hand, you will need plenty of space and a clean dry area for assembly.

Ready?

Follow this step-by-step guide

1

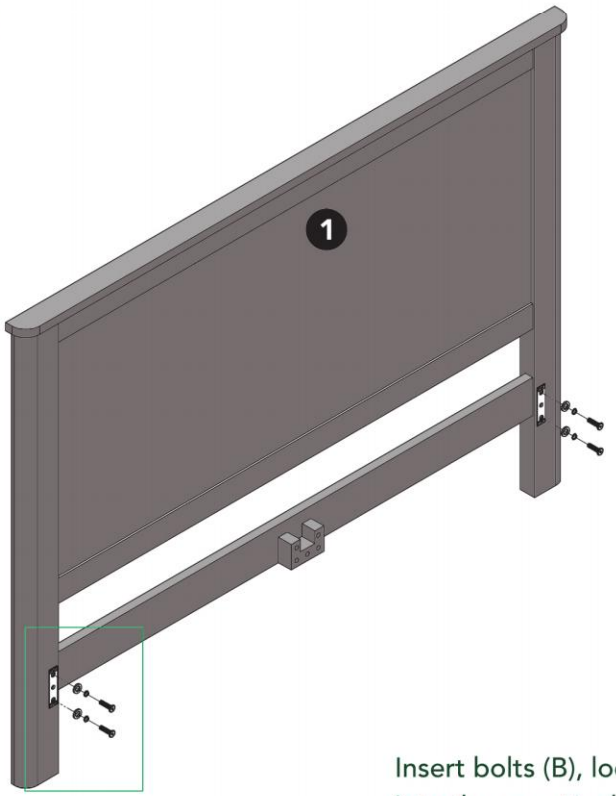

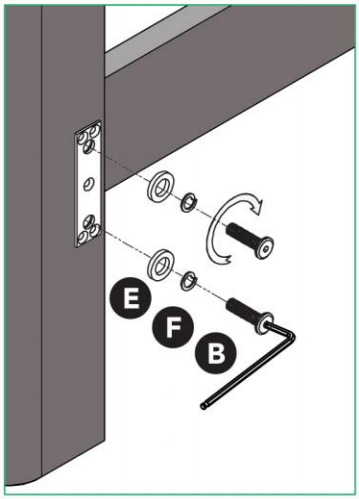

Insert bolts (B), lock washers (F) and washers (E) into the pre attached brackets on the headboard (1)
Do not fully tighten the bolts.

2

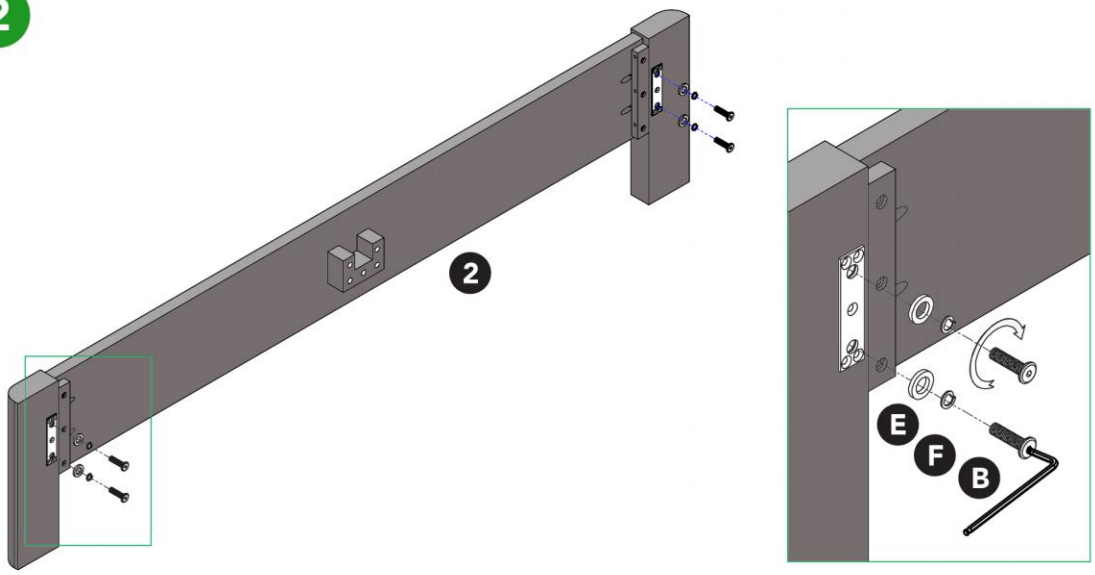

Insert bolts (B), lock washers (F) and washers (E)
Into the pre attached brackets on the footboard (2)
Do not fully tighten the bolts.

3

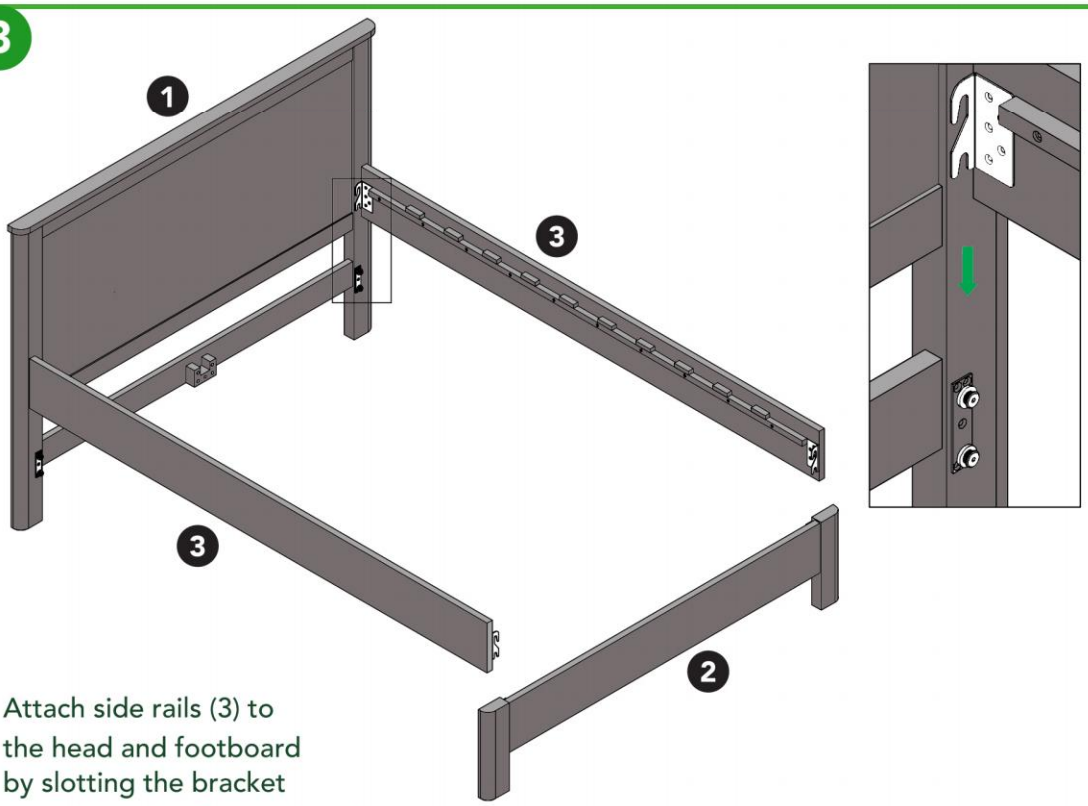

Attach side rails (3) to
the head and footboard
by slotting the bracket
over the bolts. Ensure that the
washers and locking washers can be seen

4

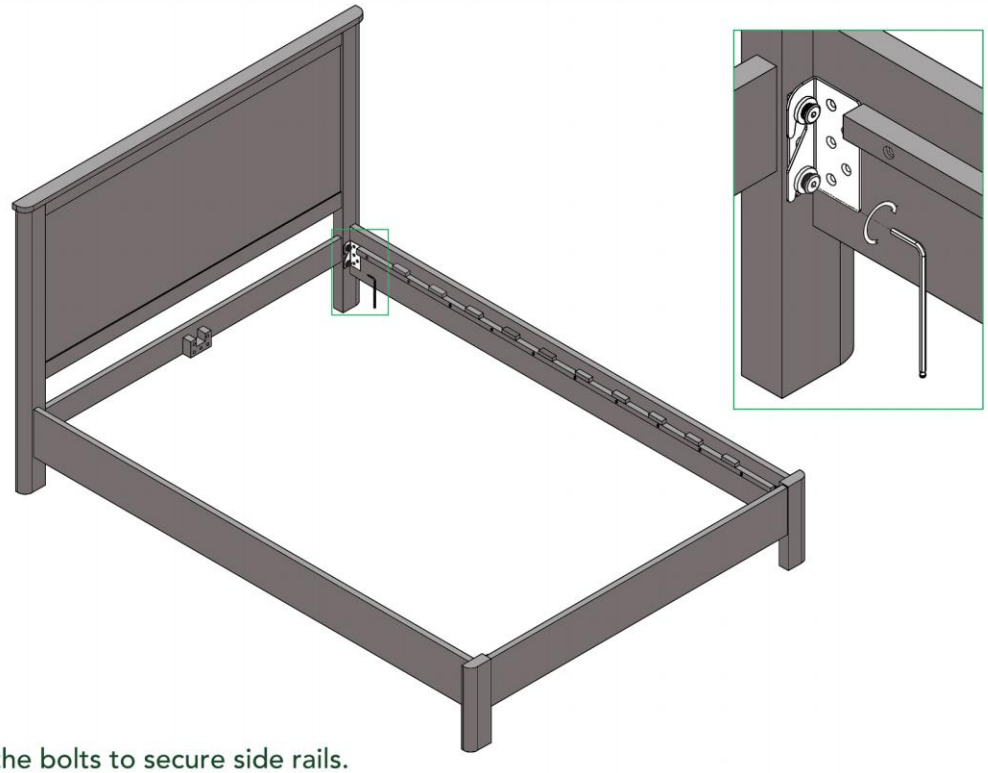

Tighten the bolts to secure side rails.

5

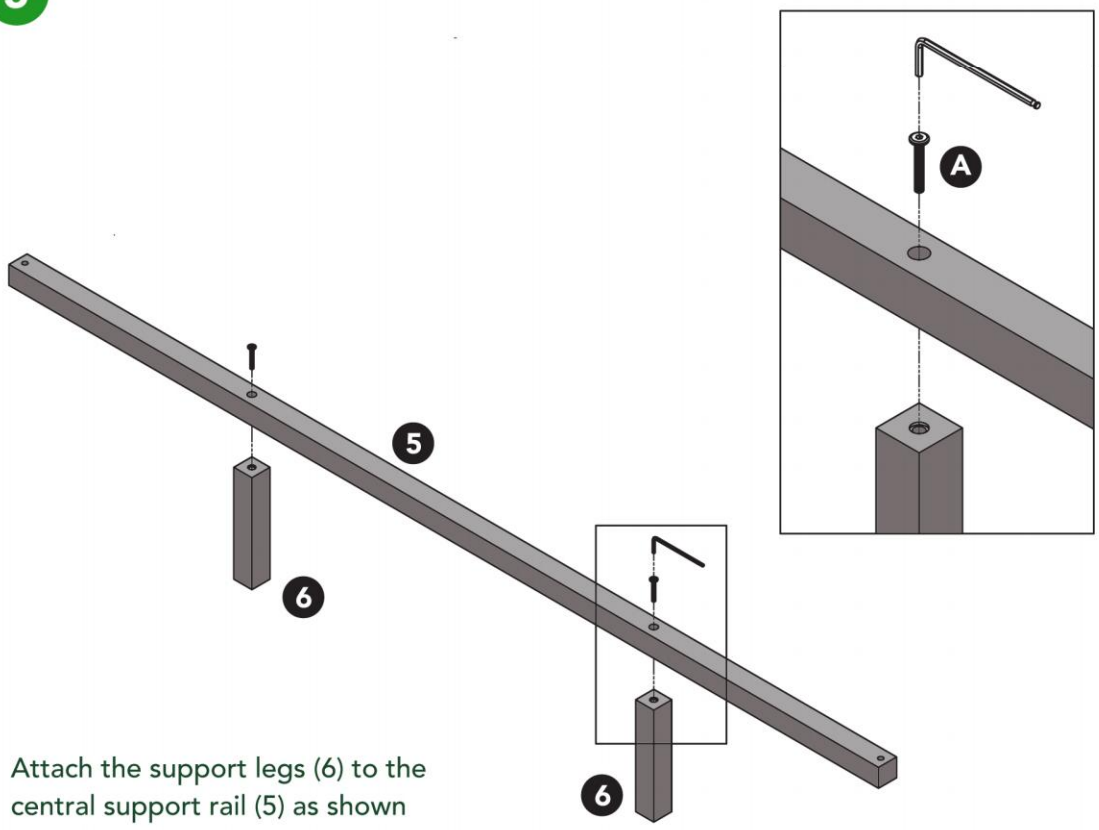

Attach the support legs (6) to the central support rail (5) as shown

6

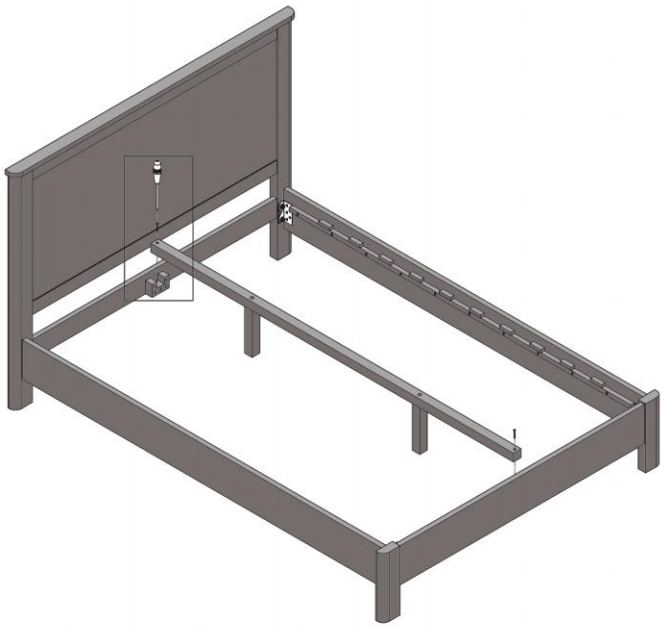

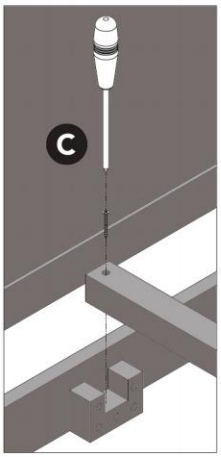

Insert the central support rail into the bed frame
and secure using screws (C)

7

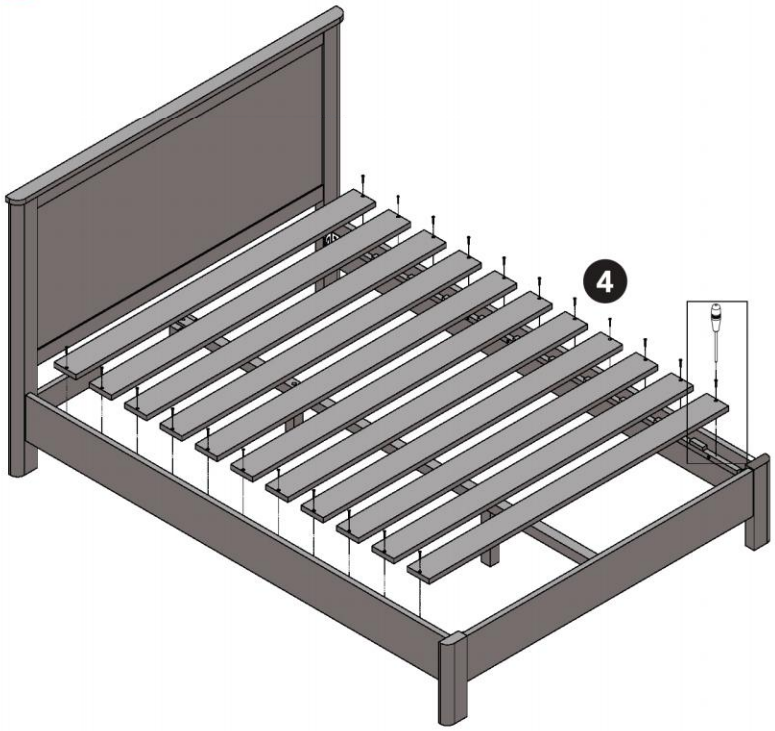

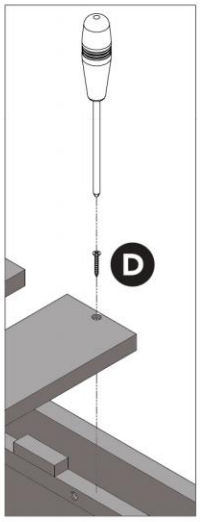

Insert the slats into the side and central rails
and secure using screws (D)

Care and maintenance

- Dust regularly with a soft clean, lint free cloth.
- The use of silicon based polish is not recommended as it can affect the finish and joints with build up over time.
- We recommend that from time to time you check all fittings are secure and tighten if necessary.
- When moving the item always lift it into position. Never drag it as this can cause damage.
- Wood is a natural product, colour and grain will vary from piece to piece. The colour may mellow over time with exposure to light.
- This product should not be discarded with household waste. Take to your local authority waste disposal centre.

Finally, we hope you enjoy your furniture for many years to come and thanks again for your purchase.

Dunelm